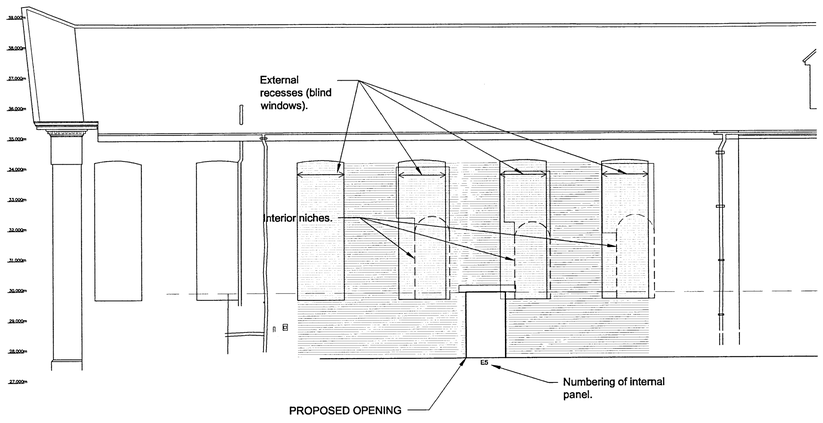

ORANGERY_EASTERN END OF NORTH ELEVATION (1:100 @A1)

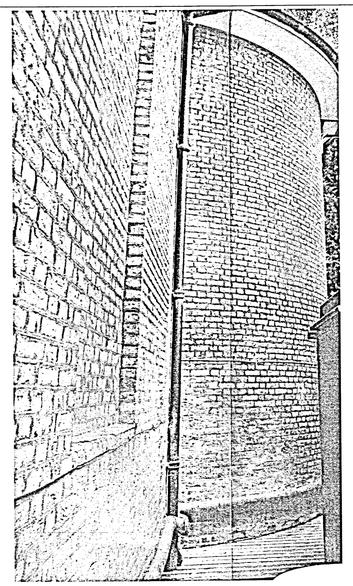

Photo of typical existing external recess (blind window).

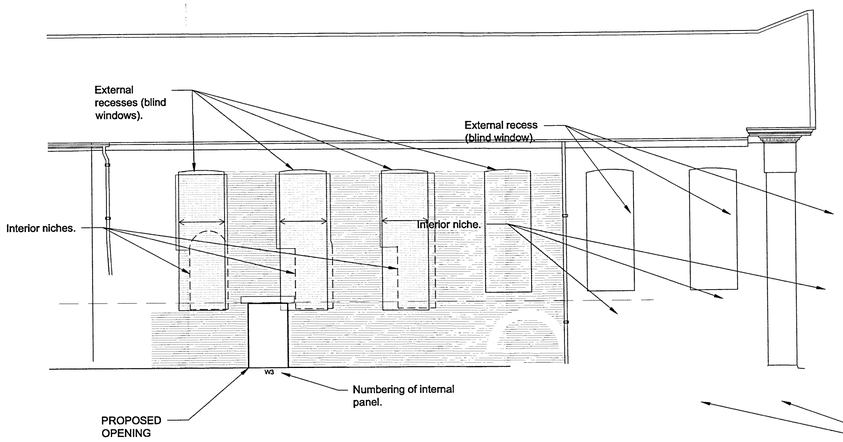

ORANGERY_WESTERN END OF NORTH ELEVATION (1:100 @A1)

0.0 5.0 10.0

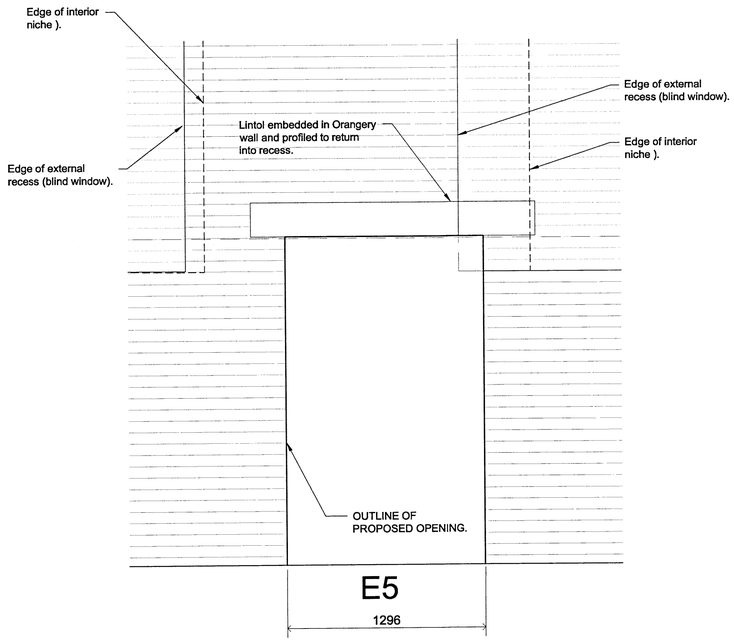

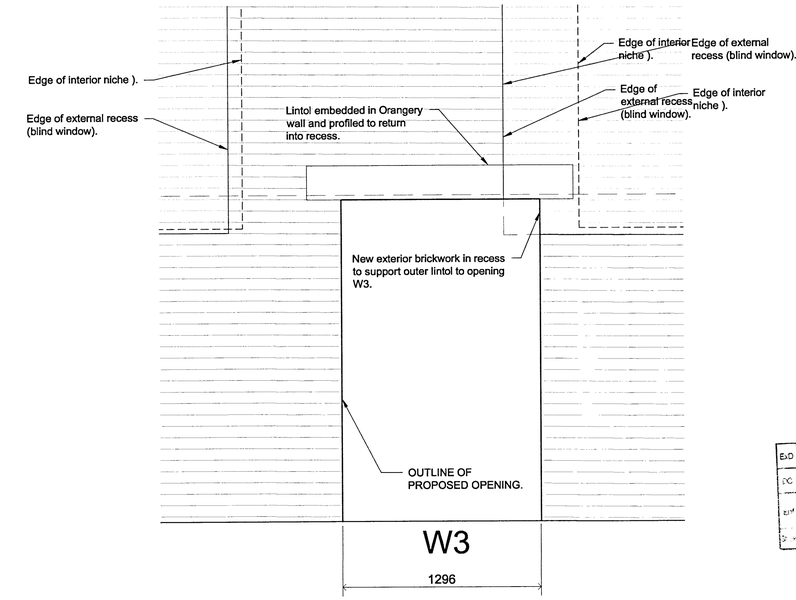

DETAILED ELEVATIONS OF OPENINGS IN NORTH WALL (1:20 @A1)

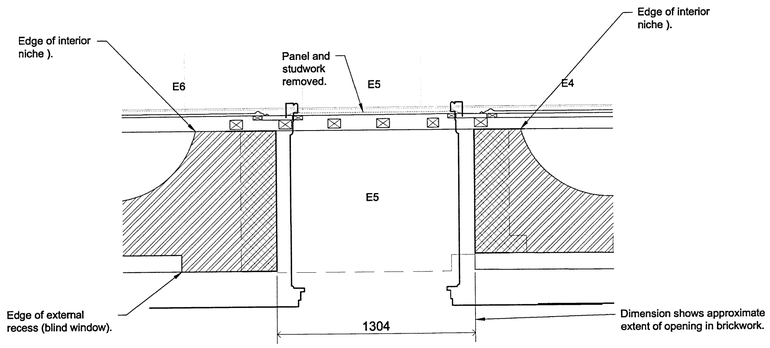

PLAN OF OPENING (E5) IN NORTH WALL (1:20 @A1)

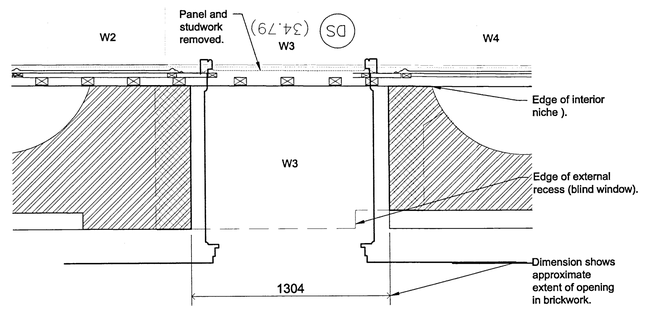

PLAN OF OPENING (W3) IN NORTH WALL (1:20 @A1)

0.0 1m

EXD	HDC	HSS	HPD	HoE	Policy	Design	Trees
DC	Received RBKC Planning					Reg	PIC
	03 MAR 2017					LLC	

NOTES:

KEY TO HATCH:

Area of existing brickwork to be stripped out to accommodate new lintols. Subsequent repairs to faces of niches and new openings where bricks are damaged is to be confirmed.

STATUS: PLANNING

REV	DATE	AMENDMENT

CLIENT: HISTORIC ROYAL PALACES

PROJECT: KENSINGTON PALACE ORANGERY YARD

LIAM O'CONNOR
ARCHITECTS AND PLANNING CONSULTANTS
75 COWCROSS STREET
LONDON EC1M 6EL
TEL.NO: 0207 250 1983
FAX.NO: 0207 251 6310
E-MAIL: info@liamoconnor.com

DRAWING TITLE: PROPOSED STRUCTURAL OPENINGS IN NORTH WALL

SCALE:	DATE:	DRAWN:
1:100@A1 1:20@A1	17.02.17	CHECKED:

DRAWING NUMBER:	REVISION:
KPO-PL-20.1	